Product Data Sheet

LE-TPA 102G-ELS

Pressed steel swivel castor, with top plate fitting, wheel, with thermoplastic rubber tread, with polypropylene wheel centre, electrically conductive, non-marking

EAN 4047526648916
ID 648915
Customs tariff number 87169090

Made in Germany

Bracket: LE series
- pressed steel, zinc-plated, blue-passivated, Cr6-free
- double ball bearing in the swivel head
- swivel head seal
- minimum swivel head play and smooth rolling characteristic and increased service life due to the special dynamic Blickle riveting process

Wheel: TPA series
- tread: high-quality thermoplastic rubber-elastomer (TPE), hardness 85 Shore A, colour grey, non-marking, oil containing
- wheel centre: high-quality polypropylene, impact resistant, colour black

Other features:
- very high chemical resistance to many aggressive substances
- operating temperature: -20 °C to +60 °C, reduced load capacity over +30 °C
- tread contains oil, may stain sensitive surfaces. alternatives: series VPA, PATH
- electrical conductivity (ohmic resistance) ≤ 10^4 Ω

Technical data:

Wheel Ø (D)	100 mm
Wheel width	32 mm
Load capacity at 4 km/h	70 kg
Load capacity (static)	175 kg
Bearing type	plain bore
Total height (H)	125 mm
Installation type	top plate
Plate size	100 x 85 mm
Bolt hole spacing	80 x 60 mm
Bolt hole Ø	9 mm
Offset (F)	36 mm
Temperature resistance min	-20 °C
Temperature resistance max	60 °C
Tread and tyre hardness	85 Shore A
Unit weight	0.6 kg
Non-marking	✓
Non-staining	✕
Antistatic	✕
ESD	✓
Electrically conductive	✓
Corrosion-resistant	✕
Heat-resistant	✕

Tread and tyre hardness
85 Shore A

Rolling resistance
very good

Wear resistance
satisfactory

Operating noise / floor surface preservation
good

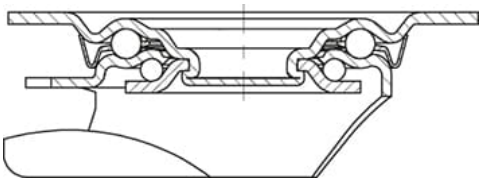

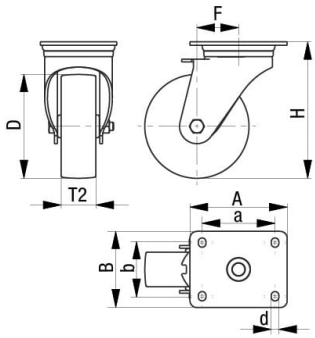

Suitable for autoclaves		×
Suitable for machine washing		×

Product references

Corresponding standard locking LE-TPA 102G-FI-ELS

Corresponding fixed castor B-TPA 102G-ELS

Wheel used TPA 102/12G-ELS