Product Data Sheet

L-ALTH 100K-FI-AS

Pressed steel swivel castor, medium duty design, with top plate fitting, with brake system 'stop-fix', heavy duty wheel, with Blickle Extrathane® polyurethane tread, with aluminium wheel centre, antistatic

EAN 4047526643744
ID 643742
Customs tariff number 87169090

Made in Germany

Bracket: L series
- pressed steel, zinc-plated, blue-passivated, Cr6-free
- double ball bearing in the swivel head
- strong central kingpin (from wheel Ø 150 mm)
- swivel head seal
- minimum swivel head play and smooth rolling characteristic and increased service life due to the special dynamic Blickle riveting process

Wheel: ALTH series
- tread: high-quality polyurethane elastomer Blickle Extrathane®, hardness 92 Shore A, colour grey, non-marking, non-staining
- wheel centre: die-cast aluminium, colour silver grey

Blickle Extrathane®

Other features:
- high chemical resistance to many aggressive substances
- operating temperature: -20 °C to +70 °C, temporarily up to +90 °C, reduced load capacity over +40 °C
- electrical conductivity (ohmic resistance) ≤ 10^7 Ω

Tread and tyre hardness
92 Shore A

Rolling resistance
very good

Wear resistance
excellent

Operating noise / floor surface preservation
good

Technical data:

Wheel Ø (D)		100 mm
Wheel width		40 mm
Load capacity at 4 km/h		250 kg
Load capacity (static)		625 kg
Bearing type		ball bearing
Total height (H)		125 mm
Installation type		top plate
Plate size		100 x 85 mm
Bolt hole spacing		80 x 60 mm
Bolt hole Ø		9 mm
Offset (F)		36 mm
Temperature resistance min		-20 °C
Temperature resistance max		70 °C
Tread and tyre hardness		92 Shore A
Unit weight		1.1 kg
Non-marking		✓
Non-staining		✓
Antistatic		✓
ESD		✓
Electrically conductive		✗
Corrosion-resistant		✗

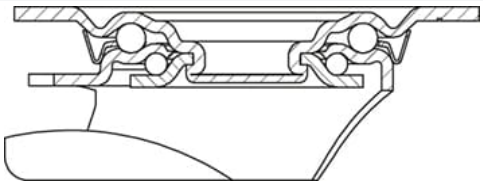

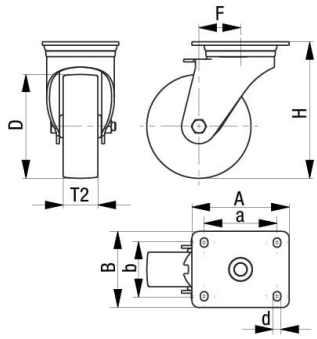

Heat-resistant	🌡	×
Tread hydrolysis-resistant		×
Suitable for autoclaves		×
Suitable for machine washing		×

Product references

Corresponding fixed castor B-ALTH 100K-AS

Corresponding swivel castor L-ALTH 100K-AS

Wheel used ALTH 100/15K-AS