GAS/GASLESS

120A MIG INVERTER MULTI WELDER

GB

70049 – MW120A SPARE PARTS DRAWING

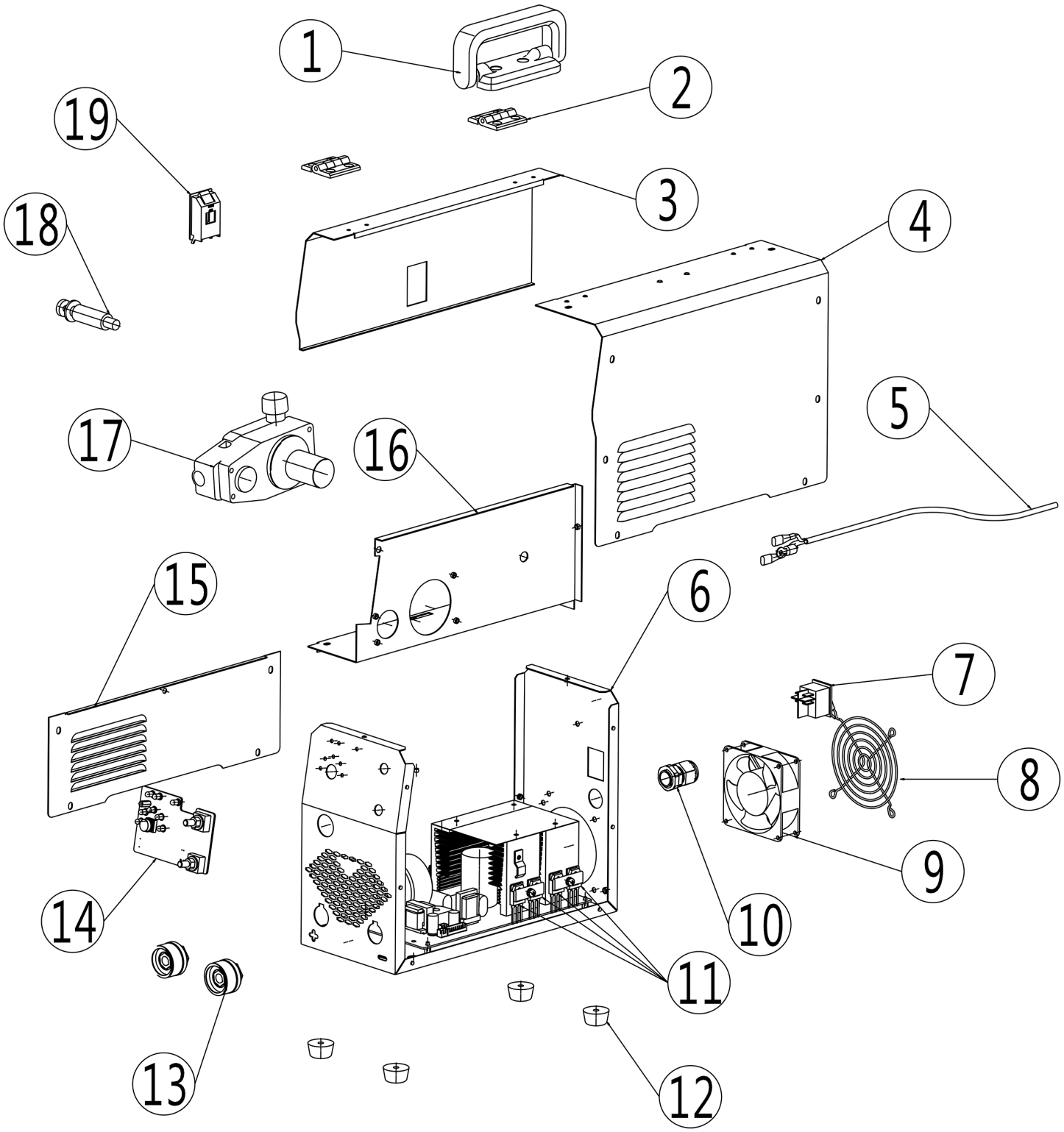

Helpline: +44 (0) 23 8049 4344 Sales Desk: +44 (0) 23 8049 4333 General Enquiries: +44 (0) 23 8026 6355 internet: drapertools.com email: sales@drapertools.com

Draper Tools Limited, Hursley Road, Chandler's Ford, Eastleigh, Hampshire. SO53 1YF UK.

GAS/GASLESS

120A MIG INVERTER MULTI WELDER

GB

70049 – MW120A SPARE PARTS LISTING

KEY No.	PART No.	STOCK No.	DESCRIPTION
1			(NP) Handle
2	YMW120A-2	95059	Hinge
3			(NP) Clamshell
4			(NP) Right side plate
5			(NP) Power cable
6			(NP) Baseplate
7	YMW120A-7	95060	On/off switch
8			(NP) Mesh
9	YMW120A-9	95069	Fan
10			(NP) Strain relief clamp
11	YMW120A-14A	95070	PCB Assembly
14			
12	YMW120A-12	95071	Footing
13	YMW120A-13	95072	Quick coupling
15			(NP) Left side plate
16			(NP) Medial partition
17	YMW120A-17	95073	Wire feeder
18	YMW120A-18	95076	Wire spool
19	YMW120A-19	95082	Clip-on

KEY No.	PART No.	STOCK No.	DESCRIPTION