GB

DRAPER®

PROPANE

SPACE HEATER

47105- PSH40C SPARE PARTS DRAWING

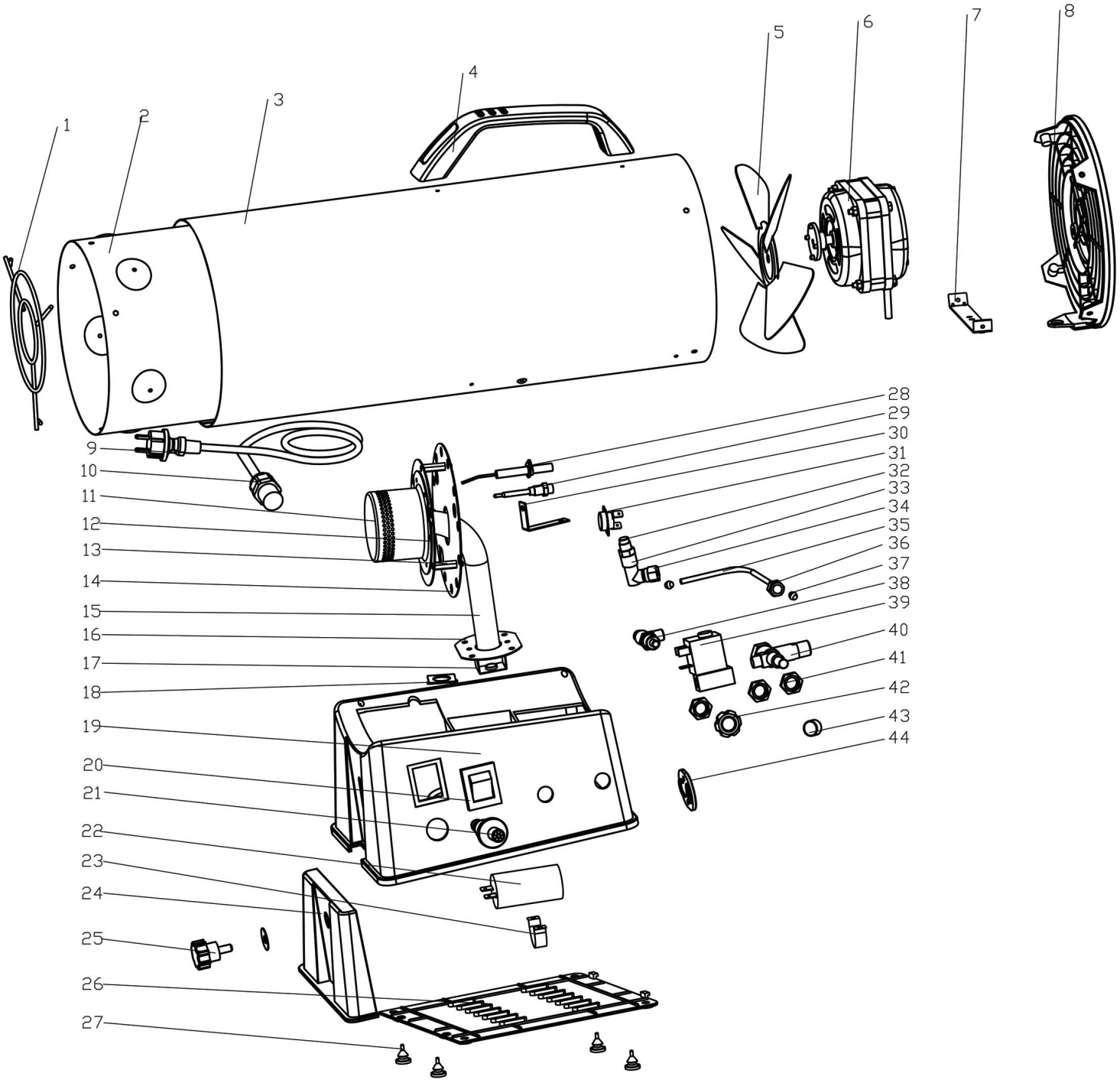

Helpline: +44 (0) 23 8049 4344 Sales Desk: +44 (0) 23 8049 4333 General Enquiries: +44 (0) 23 8026 6355 internet: drapertools.com email: sales@drapertools.com

Draper Tools Limited, Hursley Road, Chandler's Ford, Eastleigh, Hampshire. SO53 1YF UK.

GB

DRAPER®

PROPANE

SPACE HEATER

47105- PSH40C SPARE PARTS LISTING

KEY No.	PART No.	STOCK No.	DESCRIPTION
1	Y301-01	33692	Front grid
2	Y401-02	45432	Inner shell
3	Y401-03	45361	Out shell
4	Y101-04	23411	Plastic handle
5	Y301-05	33658	Fan blade
6	Y301-06	33062	Motor
7	Y301-07	32923	Motor frame
8	Y301-08	32832	Fan guard
9	Y101-08	22380	Power cord
10	Y101-09	22371	Cord fixation
11	Y301-11	32817	Burner assembly
12	Y301-12	32811	Burner block
13	Y301-13	32608	Hexagonal prism
14	Y301-14	32214	Baffle
15	Y301-15	32107	Intake tube
16	Y301-16	32099	Plate
17	Y301-17	31936	Injection
18	Y301-18	31915	Link stopper
19	Y301-19	31560	Base
20	Y301-20	31335	Power switch
21	Y301-21	31333	Igniter
22	Y301-22	31332	Capacitor
23	Y301-23	31230	Condenser bracket
24	Y301-24	30738	Height controller
25	Y301-25	30476	Round bolt
26	Y301-26	29603	Base cover
27	Y301-27	29413	Foot pad
28	Y301-28	29390	Ignition needle
29	Y301-29	29271	Thermocouple
30	Y101-23	20565	Thermostat clip
31	Y101-24	20562	Head thermostat
32	Y401-32	34627	Gas nozzle
33	Y401-33	34609	Nozzle seat
34	Y401-34	34551	Fixation nut M8
35	Y401-35	34536	Fuel tube
36	Y401-36	34535	Fixation nut G1/8
37	Y401-37	34450	O-ring
38	Y401-38	34250	Adjustment valve
39	Y401-39	33856	Electromagnetic valve
40	Y401-40	33824	Flameout protector
41	Y301-41	29201	Fixation nut

KEY No.	PART No.	STOCK No.	DESCRIPTION
42	Y301-42	29200	Plastic knob
43	Y301-43	29199	Protection guard
44	Y301-44	29196	Fixation nut for gas inlet
-	Y301-REG	36189	Regulator and hose

Helpline: +44 (0) 23 8049 4344 Sales Desk: +44 (0) 23 8049 4333 General Enquiries: +44 (0) 23 8026 6355 internet: drapertools.com email: sales@drapertools.com

Draper Tools Limited, Hursley Road, Chandler's Ford, Eastleigh, Hampshire. SO53 1YF UK.