GB

DRAPER®

PROPANE

SPACE HEATER

47100- PSH15C SPARE PARTS DRAWING

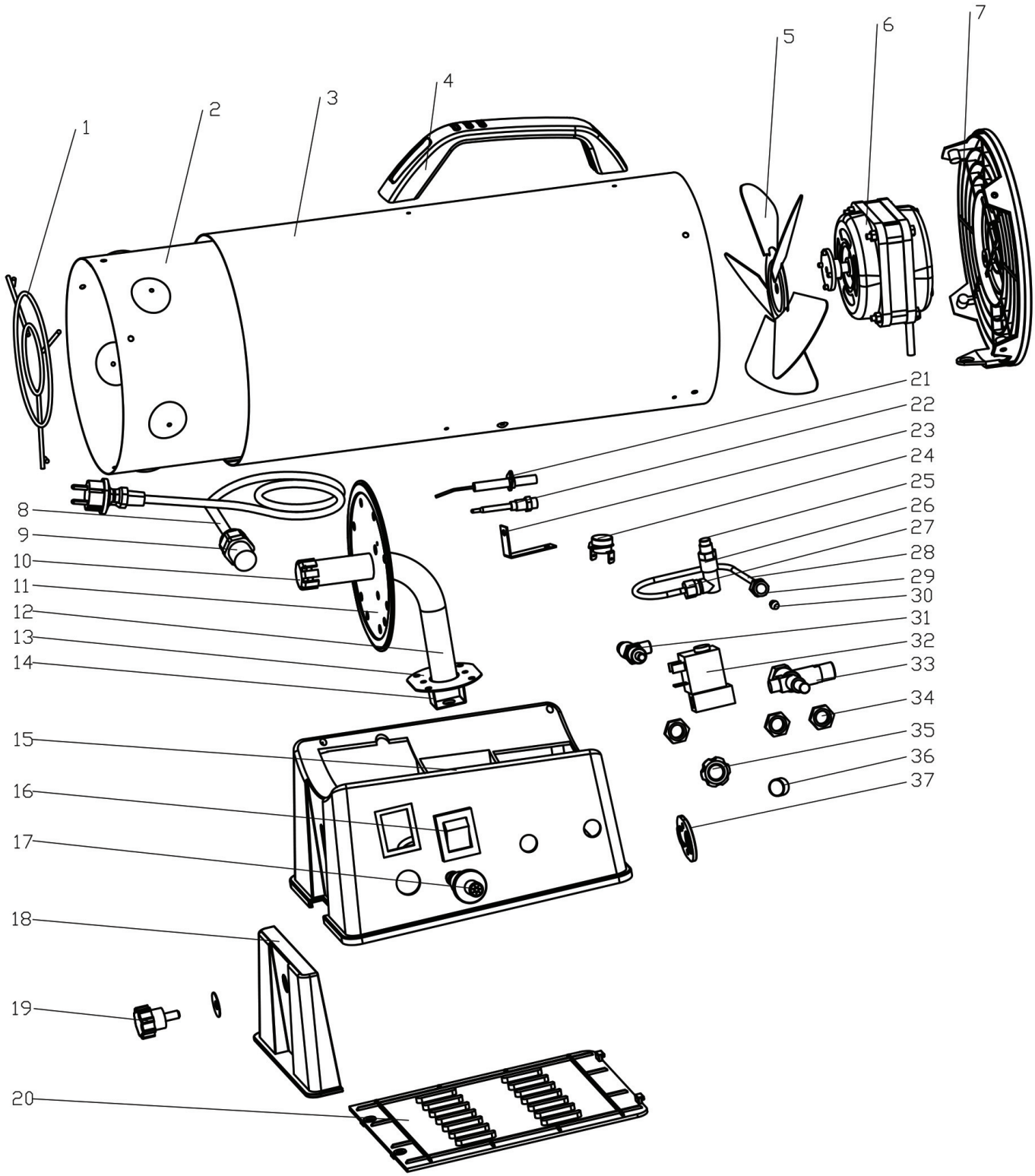

Helpline: +44 (0) 23 8049 4344 Sales Desk: +44 (0) 23 8049 4333 General Enquiries: +44 (0) 23 8026 6355 internet: drapertools.com email: sales@drapertools.com

Draper Tools Limited, Hursley Road, Chandler's Ford, Eastleigh, Hampshire. SO53 1YF UK.

GB

DRAPER®

PROPANE

SPACE HEATER

47100- PSH15C SPARE PARTS LISTING

KEY No.	PART No.	STOCK No.	DESCRIPTION
1	Y101-01	24050	Front grid
2	Y151-02	24796	Inner shell
3	Y151-03	24789	Out shell
4	Y101-04	23411	Plastic handle
5	Y101-05	23338	Fan blade
6	Y101-06	23022	Motor
7	Y101-07	22613	Fan guard
8	Y101-08	22380	Power cord
9	Y101-09	22371	Cord fixation
10	Y101-10	22358	Burner assembly
11	Y101-11	21655	Baffle
12	Y101-12	21535	Intake tube
13	Y101-13	21036	Plate
14	Y101-14	21035	Injection
15	Y101-15	20841	Base
16	Y101-16	20840	Power switch
17	Y101-17	20838	Igniter
18	Y101-18	20784	Height controller
19	Y101-19	20592	Round bolt
20	Y101-20	20579	Base cover
21	Y101-21	20569	Ignition needle
22	Y101-22	20567	Thermocouple
23	Y101-23	20565	Thermostat clip
24	Y101-24	20562	Head thermostat
25	Y151-25	24787	Gas nozzle
26	Y151-26	24786	Nozzle seat
27	Y151-27	24785	Fixation nut M8
28	Y151-28	24784	Fuel tube
29	Y151-29	24775	Fixation nut G1/8
30	Y151-30	24770	O-ring
31	Y151-31	24769	Adjustment valve
32	Y151-32	24590	Electromagnetic valve
33	Y151-33	24413	Flameout protector
34	Y101-34	19229	Fixation nut
35	Y101-35	19216	Plastic knob
36	Y101-36	19127	Protection guard
37	Y101-37	19126	Fixation nut for gas inlet
-	Y151-REG	35775	Regulator and hose

KEY No.	PART No.	STOCK No.	DESCRIPTION

Helpline: +44 (0) 23 8049 4344 Sales Desk: +44 (0) 23 8049 4333 General Enquiries: +44 (0) 23 8026 6355 internet: drapertools.com email: sales@drapertools.com

Draper Tools Limited, Hursley Road, Chandler's Ford, Eastleigh, Hampshire. SO53 1YF UK.