Parts Information:

Vice 125mm Quick Action Swivel Base SG Iron

Model No: QAVE125

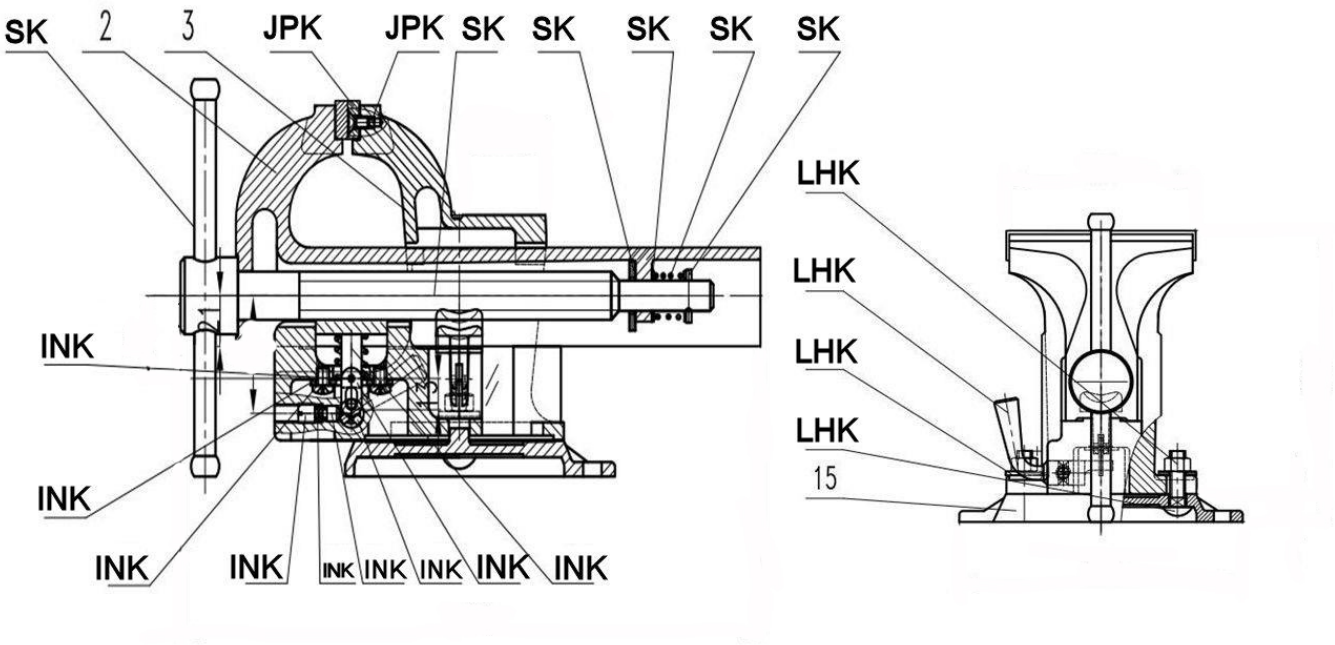

Item	Part No.	Description
INK	QAVE125.INK	INSIDE NUT KIT
JPK	QAVE125.JPK	JAW FACE PLATE KIT (PAIR)
LHK	QAVE125.LHK	LOCKING HANDLE KIT
SK	QAVE125.SK	SPINDLE KIT

Item	Part No.	Description
2	QAVE125.02	FRONT JAW
3	QAVE125.03	BACK JAW
15	QAVE125.15	SWIVEL BASE

NOTE: It is our policy to continually improve products and as such we reserve the right to alter data, specifications and component parts without prior notice.
IMPORTANT: No liability is accepted for incorrect use of product.
WARRANTY: Guarantee is 12 months from purchase date, proof of which will be required for any claim.

Sealey Group, Kempson Way, Suffolk Business Park, Bury St Edmunds, Suffolk. IP32 7AR
01284 757500 | 01284 703534 | sales@sealey.co.uk | www.sealey.co.uk